Toothed three-finger gripper series FOUK-FZ

FZ70-125

Static load-bearing torque

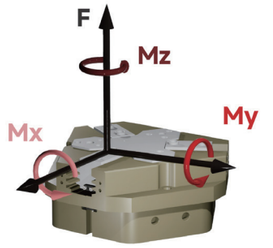

- Mx 75Nm
- Mz 105Nm
- My 65Nm
- F 1800N

Gripping force curve

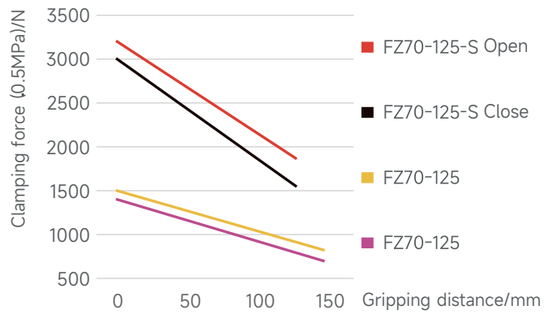

FZ 70 - 125 - S - B - C30 - P - NO - H

Serial No.	Cylinder bore	Maximum shell diameter	Short stroke	Ventilation at bottom	Length of push rod	Dust cover IP64	Self-locking form	High temperature resistance
FZ: Toothed three-finger gripper			S: Increased gripping force /: Standard version M	/: Ventilation on the side	C30: 30mm C40: 40mm /: Without push plate	/: Without dust cover	NO: Self-locking by opening NC: Self-locking by closing /: Without self-locking	H: -5~240°C /: 0~60°C

Inductive proximity sensor

IPSD-2NS-0823-L3	Inductive, NPN, 3-core3m
IPSD-2PS-0823-L3	Inductive, PNP, 3-core3m

Magnetic proximity sensor

MZC2-1V7NS-FU0	Magnetic, NPN, 3-core3m
MZC2-1V7PS-FU0	Magnetic, PNP, 3-core3m

*Two sensors are required for each gripper. For the detailed monitoring of two positions, see the sensor appendix.

Product attributes	FZ70-125	FZ70-125-NO	FZ70-125-NC	FZ70-125-S	FZ70-125-S-NO	FZ70-125-S-NC	Unit
Single stroke	10	10	10	5	5	5	mm
Product weight	1.6	2.2	2.3	1.7	2.3	2.4	kg
Maximum allowable gripping distance	145	145	145	125	125	125	mm
Theoretical maximum gripping force: opening/closing	310P/280P	310P/-	-/280P	650P/600P	650P/-	-/600P	N
Gas consumption of single opening and closing cycle	0.6	0.9	0.9	0.6	0.9	0.9	L
Minimum Spring Locking Force		720	720		1500	1500	N
Workpiece weight	9	9	9	19.5	19.5	19.5	kg
Opening/closing time	0.1/0.1	0.1/0.2	0.2/0.1	0.1/0.1	0.1/0.2	0.2/0.1	s

P: Compressed air pressure [bar]
Gas consumption: volume of gas consumed at normal pressure (0.5MPa)

Maximum allowable single-finger gripping weight/kg	1	Specification of air connection port	G1/8
Repeated gripping accuracy/mm	± 0.02	Temperature range of application/°C	-5~60
Operating air pressure range/bar	3~8	IP rating	40

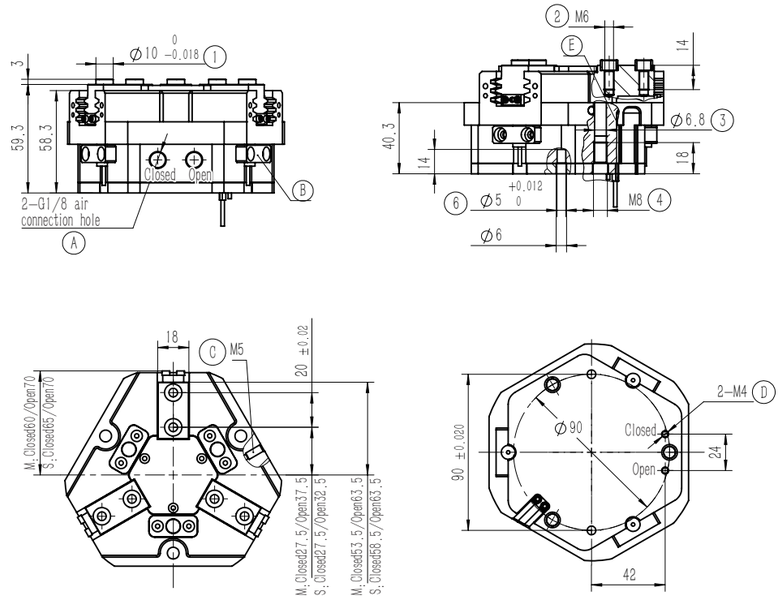

1. Gripping finger location pin bushing (standard)
2. Mounting hole of gripping finger
3. 4 Gripper mounting hole
6. Mounting and positioning pin hole
A. Compressed air connection port
B. Location of inductive proximity sensor
C. Positive-pressure air blowing hole/grease injection hole
D. Bottom ventilation hole (version-B)
E. Location of magnetic proximity sensor

FZ70-125-C30 Pushing

The length A of the push rod can be of the standard version or the extended version, with loading function, and the minimum thrust of the push plate is 36N. If it is dust-proof and provided with the push plate, the stroke is 6.

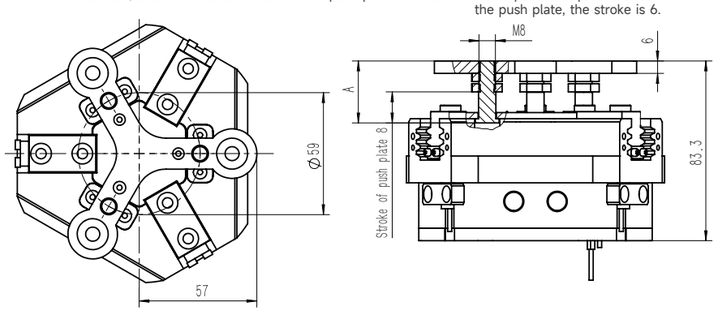

FZ70-125-NC/NO Self-locking

Built-in spring, mechanical self-locking

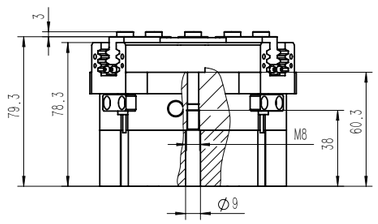

FZ70-125-P Dust-proof

Dust-proof module, IP64 for the positive-pressure air blowing hole after it, is connected to the compressed air of 0.05-0.10MPa, otherwise, IP50

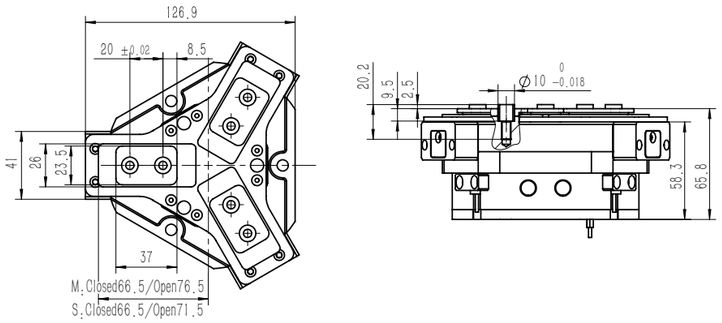
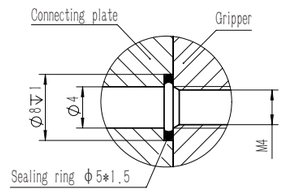
FZ70-125-B Ventilation at bottom